Pulse-Amplifier HPPI-TA-ATT-6

Advanced TLP/HMM/HBM Solutions

1 Features

- Pulse amplifier for low current TLP measurement in the mA range
- 32 dB gain at max. 0.8 V output
- 50 Ω input and output impedance (SMA)
- 5 V USB power supply



2 Description

The USB-powered Pulse Amplifier HPPI-TA-ATT-6 is designed to improve the measurement of low-current Transmission Line Pulse (TLP) signals in the milliampere range.

In conventional TLP setups, current sensors with sensitivities of 0.5 V A^{-1} to 5 V A^{-1} produce only millivolt-level output signals at low currents.

These small signals can be difficult to resolve accurately due to the limited signal-to-noise ratio (SNR) of digital oscilloscopes.

The Trigger Amplifier provides 32 dB of voltage gain directly at the current sensor output, increasing the signal amplitude before oscilloscope acquisition.

Its wideband and low noise design preserves the relevant transient characteristics of the TLP waveform, enabling improved signal resolution and more reliable low-current measurements.

Powered via USB, the amplifier offers a compact and convenient solution for extending the sensitivity of standard TLP measurement setups.

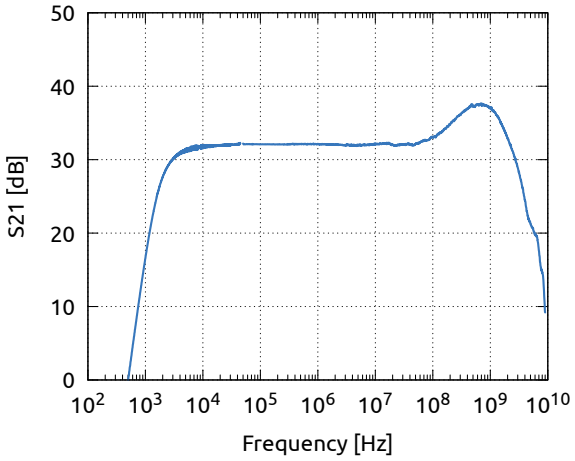

Figure 1: Frequency response S21

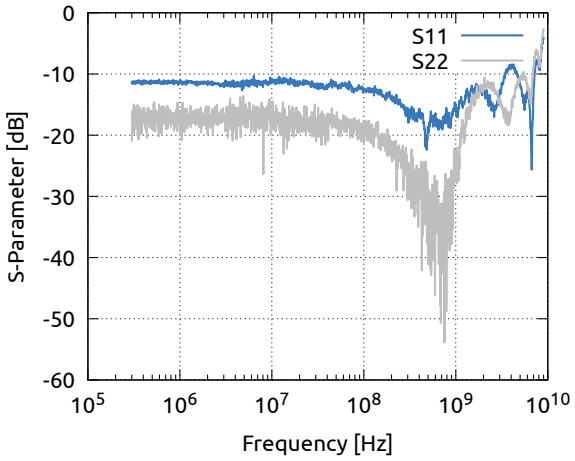

Figure 2: Return loss S11, S22

3 Specifications

Nominal impedance	50	Ω
Nominal gain	32	dB
Lower cut-off frequency [1)]	3	kHz
Upper cut-off frequency [1)]	2	GHz
Maximum peak pulse output voltage [2)]	0.8	V
Maximum peak pulse input voltage [2)]	0.2	V
Supply voltage (USB)	5	V
Current consumption (USB)	80	mA

[1)] 3 dB

[2)] for linear operation

High Power Pulse Instruments GmbH
Internet: https://www.hppi.de/
E-mail: info@hppi.de

4 Application

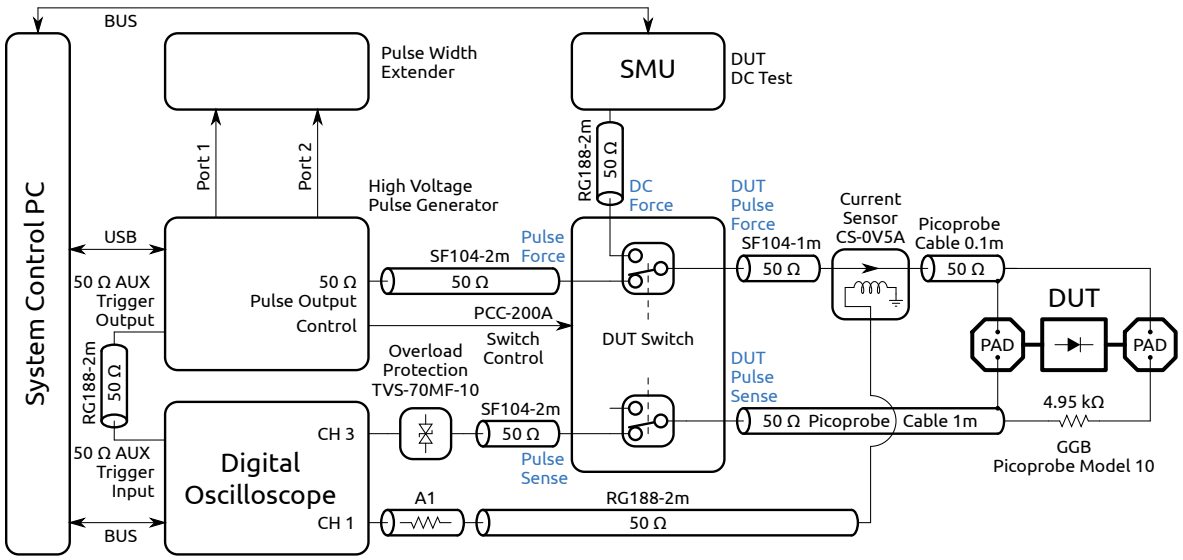

Figure 3: Standard TLP measurement setup

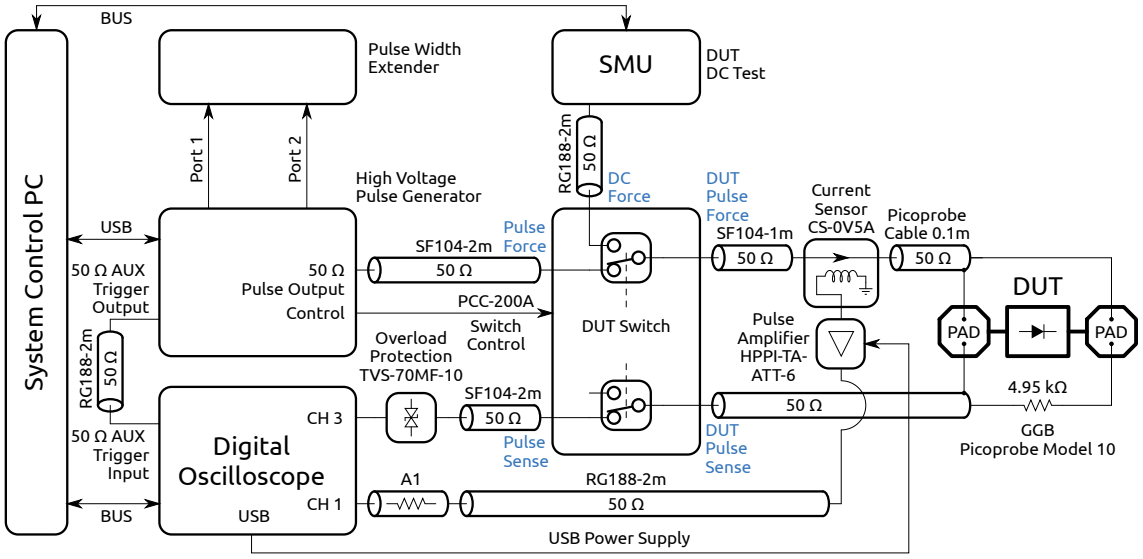

Figure 4: Low current standard TLP measurement setup

5 Ordering Information

Pos.	Description	Part No.
01	Pulse-Amplifier	HPPI-TA-ATT-6

General

The product data contained in this data-sheet is exclusively intended for technically trained staff. You and your technical departments will have to evaluate the suitability of the product for the intended application and the completeness of the product data with respect to such application. Our products are solely intended to be commercially used internally and should not be sold to consumers. This data-sheet is describing the specifications of our products for which a warranty is being granted by HPPI GmbH. Any such warranty is granted exclusively pursuant the terms and conditions of the respective supply agreement. There will be no guarantee of any kind for the product and its specifications. For further information on technology, specific applications of our product, delivery terms, conditions and prices please contact HPPI:

High Power Pulse Instruments GmbH
Stadlerstrasse 6A
D-85540 Haar, Germany
Phone : +49 (0)89 8780698 - 440
Fax : +49 (0)89 8780698 - 444
E-Mail : info@hppi.de

Due to technical requirements our products and/or their application may be harmful. For information please read carefully the manual or contact HPPI. Safety notes in the manual will inform you about possible risks that result from any foreseeable application of our products. Changes of this data-sheet are reserved.