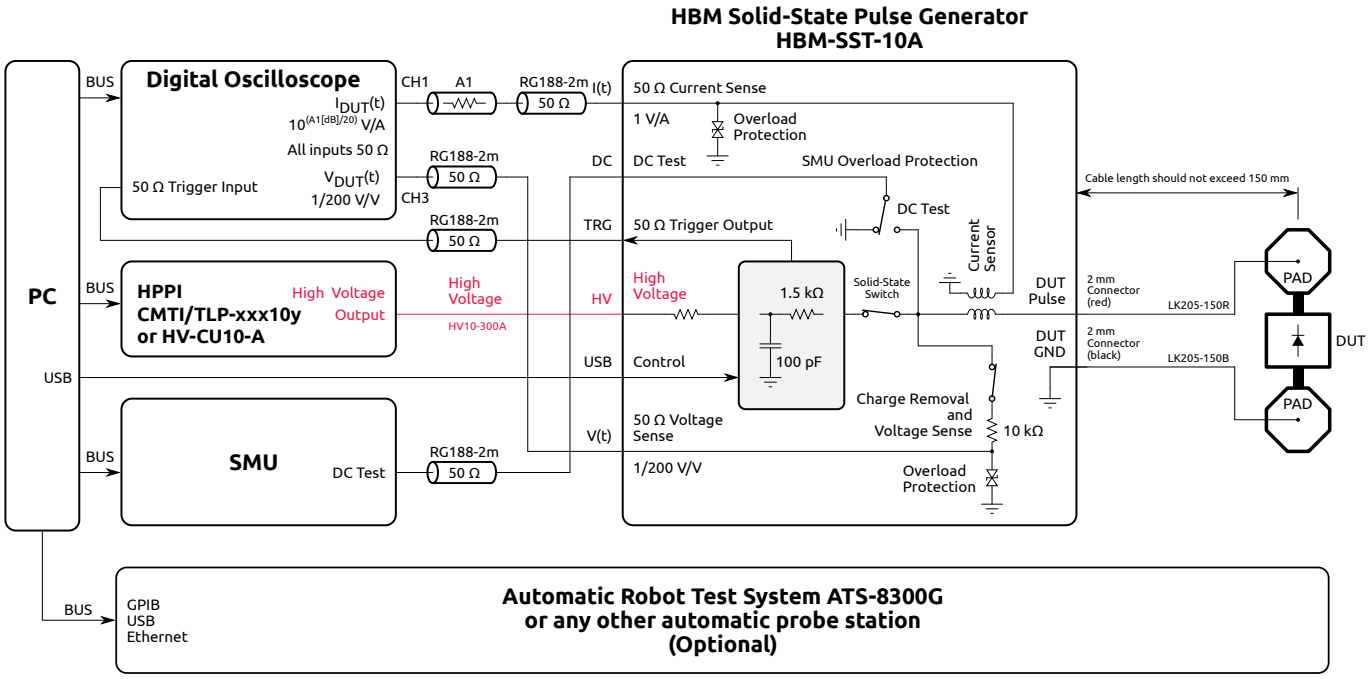

Figure 1: HBM-SST-10A (±10 kV) measurement setup. The red line indicate the 10 kV high voltage interconnection cable.

1 Measurement Setup

Fig. 1 shows the measurement system setup using the HBM pulse generator HBM-SST-10A (±10 kV), as presented in Fig. 2. The high voltage interconnection is done using a 3 m long coaxial cable with high voltage connectors on both sides. Fig. 3 shows the high voltage equivalent circuit of the measurement setup, to be used for the job hazard risk evaluation.

Figure 2: HBM pulse generator HBM-SST-10A (±10 kV)

2 Job Hazard Risk Evaluation

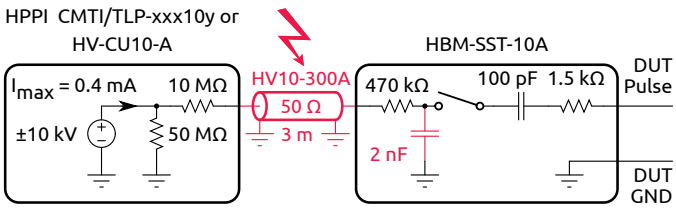

Figure 3: High voltage equivalent circuit

The integrated 10 kV high voltage power supply module has a internal current limiter at 0.4 mA. In addition the high voltage output is isolated by a 50 MΩ shunt resistance and a 10 MΩ series resistance. The HBM-SST-10A (±10 kV) charging capacitor has 2 nFcapacitance and is isolated by a 470 kΩ resistor. The maximum collected charge, including the 3 m long interconnection cable, results to Q_{max} = (300 pF + 2 nF) · 10 kV = 23 µC, which is below the limit of 45 µC for the normal operating condition (Section 6.3.1 in [1]).

Therefore, no additional laboratory safety requirements are necessary to operate the HBM-SST-10A (±10 kV).

References

[1] VDE, *DIN EN 61010-1:2010 + Cor.:2011, Sicherheitsbestimmungen für elektrische Mess-, Steuer-, Regel- und Laborgeräte, Teil 1: Allgemeine Anforderungen*, IEC 61010-1:2010 + Cor.:2011, Jul. 2011.